KREDONE®

QUALITY ASSURED WITH KREDONE



UNBELIEVABLE Design

Bathroom Accessories

Make Luxurious Bathroom

KREDONE®

QUALITY ASSURED WITH KREDONE

About Us :

Kredone, inspired by this principle of performance, we embarked upon the journey of manufacturing only the best-in-class hardware products for quality conscious consumers. Ever since our inception, we have believed in the power of perfection and that's why every product that reaches your hands are subject to stringent quality checks at every stage. From raw material to the finished goods, this signature style of Kredone is visible.

This happens thanks to our meticulously streamlined process – from design board to delivery van – that is managed by a highly dedicated team of professional who ensure the utmost levels of excellence. Our manufacturing assembly boasts of having the latest technology and equipments to produce some of the finest articles of kitchen basket and hardware products.

At Kredone, we strive for perfection forever. So our customers never have the chance to complain.

KREDONE®
QUALITY ASSURED WITH KREDONE

INDEX

Segura..... 04
Len..... 06
Len PVD Gold..... 08
Len PVD Rose Gold..... 10
Len PVD Black..... 12
Len Matt Black..... 14
Tajo..... 16
Tajo Matt Black..... 18
Ebro..... 20
Ebro Matt Black..... 22
Genil..... 24
Duro..... 26
Jucar..... 28
Glass Shelf & Corner..... 30
Accessories..... 33
Shelf..... 34

KREDONE®
QUALITY ASSURED WITH KREDONE

SEGURA
Collection



Code : 1001
Soap Dish
MRP : 970/-



Code : 1002
Tumbler Holder
MRP : 1285/-

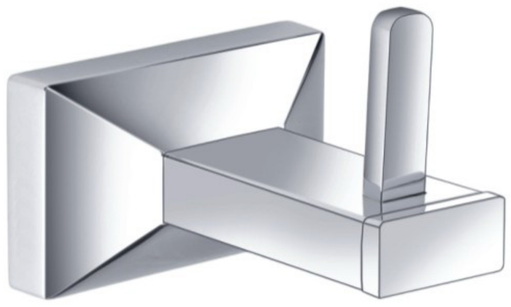

Code : 1005
Rob Hook
MRP : 780/-



Code : 1004
Towel Road
MRP : 1880/-



Code : 1003
Napkin Ring
MRP : 1115/-



Code : 1009
Liquid Dispenser
MRP : 1490/-

KREDONE®
QUALITY ASSURED WITH KREDONE

SEGURA
Collection



Code : 1011
Tumbler with Soap Dish
MRP : 1785/-

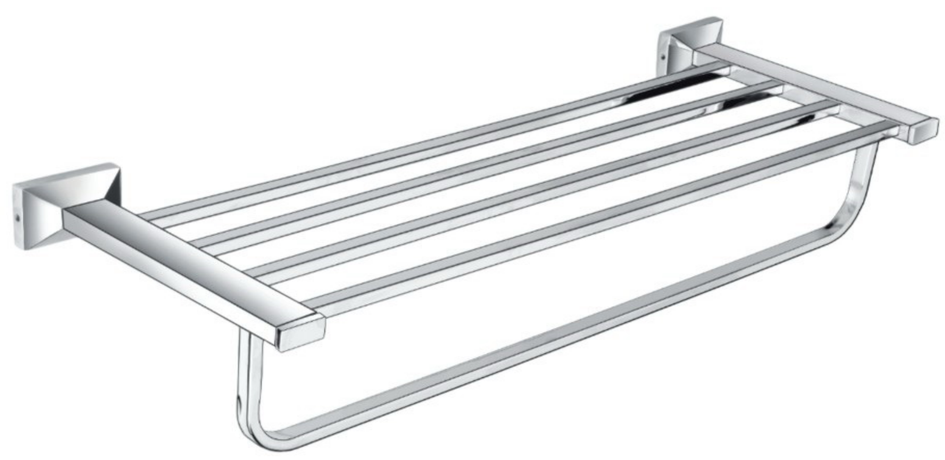

Code :1006
Towel Rack
MRP : 3935/-



Code : 1010
Double Soap Dish
MRP : 1450/-



Code : 1008
Paper Holder
MRP : 1320/-



Code : 1015
Tumbler with liquid
MRP : 2345/-



KREDONE®
QUALITY ASSURED WITH KREDONE

Len
Collection



Code : 901
Soap Dish
MRP : 850/-



Code : 902
Tumbler Holder
MRP : 1110/-



Code : 905
Rob Hook
MRP : 765/-

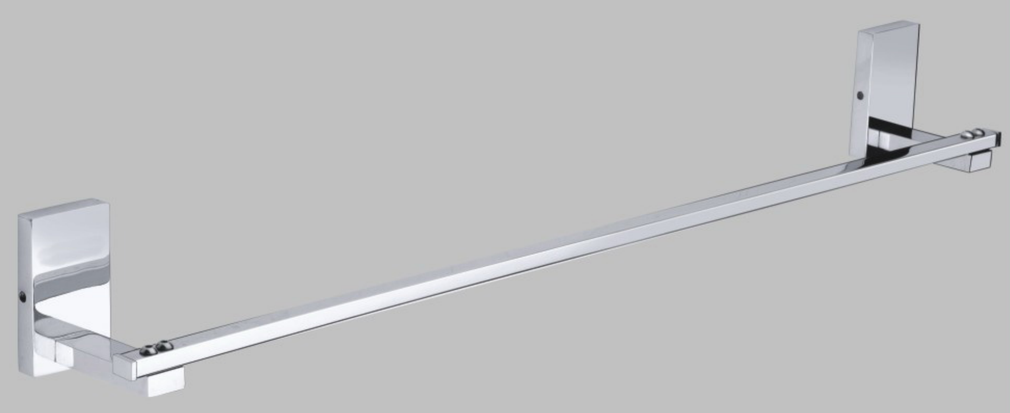

Code : 904
Towel Road
MRP : 1835/-



Code : 903
Napkin Ring
MRP : 1085/-



Code : 909
Liquid Dispenser
MRP : 1375/-

KREDONE®

QUALITY ASSURED WITH KREDONE

Len Collection



Code : 911

Tumbler with Soap Dish

MRP : 1660/-



Code :906

Towel Rack

MRP : 4740/-



Code : 910

Double Soap Dish

MRP : 1350/-



Code : 908

Paper Holder

MRP : 1415/-



Code : 915

Tumbler with liquid

MRP : 2175/-

Stylish Bathroom Accessories

KREDONE®
QUALITY ASSURED WITH KREDONE

Len PVD Gold
Collection



Code : 941
Soap Dish
MRP : 1230/-



Code : 942
Tumbler Holder
MRP : 1355/-



Code : 945
Rob Hook
MRP : 995/-



Code : 944
Towel Road
MRP : 2430/--

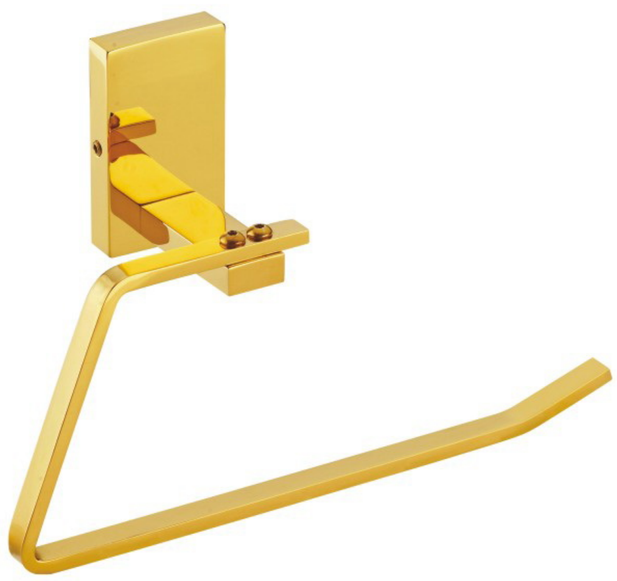

Code : 943
Napkin Ring
MRP : 1505/-



Code : 949
Liquid Dispenser
MRP : 1640/-

KREDONE®
QUALITY ASSURED WITH KREDONE

Len PVD Gold
Collection



Code : 951
Tumbler With Soap Dish
MRP : 2345/-



Code :946
Towel Rack
MRP : 6335/-



Code : 950
Double Soap Dish
MRP : 2150/-



Code : 948
Paper Holder
MRP : 2120/-

All Available
PVD Gold



KREDONE®
QUALITY ASSURED WITH KREDONE

Len PVD Rose Gold
Collection



Code : 961
Soap Dish
MRP : 1230/-



Code : 962
Tumbler Holder
MRP : 1355/-



Code : 965
Rob Hook
MRP : 995/-

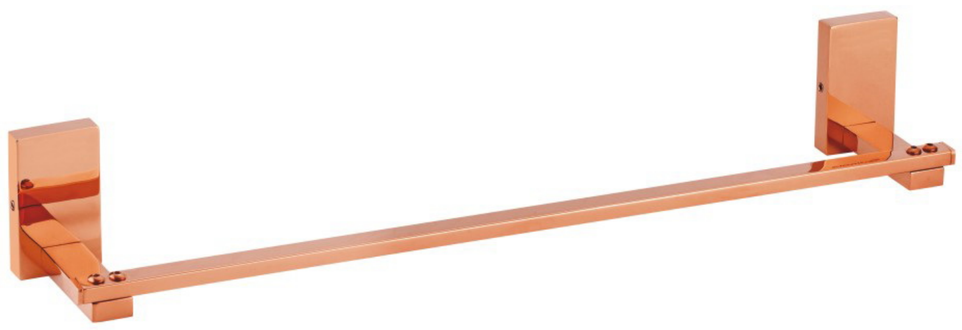

Code : 964
Towel Road
MRP : 2430/-

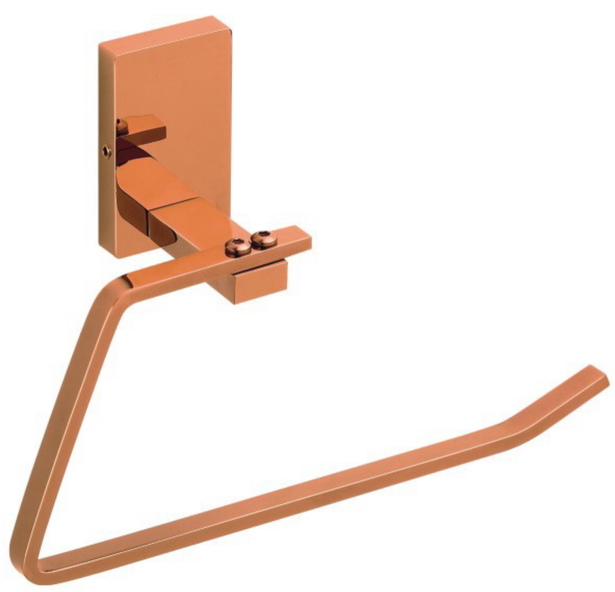

Code : 963
Napkin Ring
MRP : 1505/-



Code : 969
Liquid Dispenser
MRP : 1640/-

KREDONE®
QUALITY ASSURED WITH KREDONE

Len PVD Rose Gold
Collection



Code : 971
Tumbler With Soap Dish
MRP : 2345/-

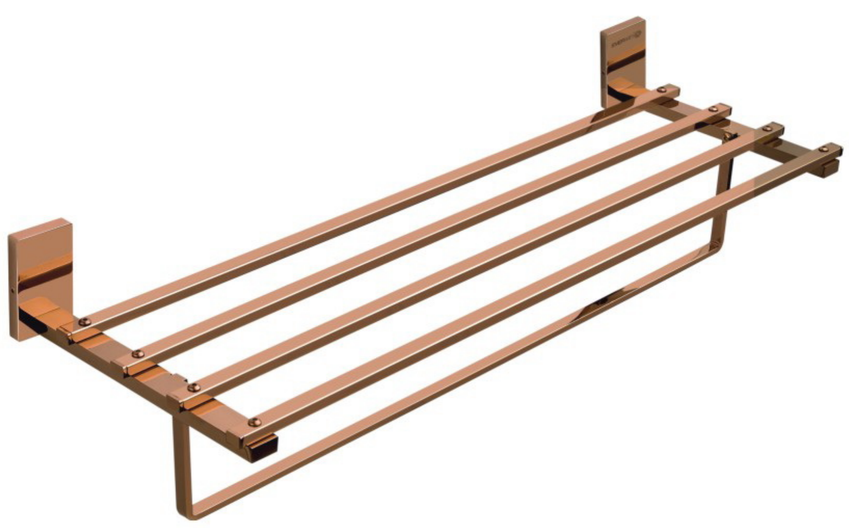

Code :966
Towel Rack
MRP : 6340/-



Code : 970
Double Soap Dish
MRP : 2150/-



Code : 968
Paper Holder
MRP : 2120/-

All Available
PVD Rose Gold

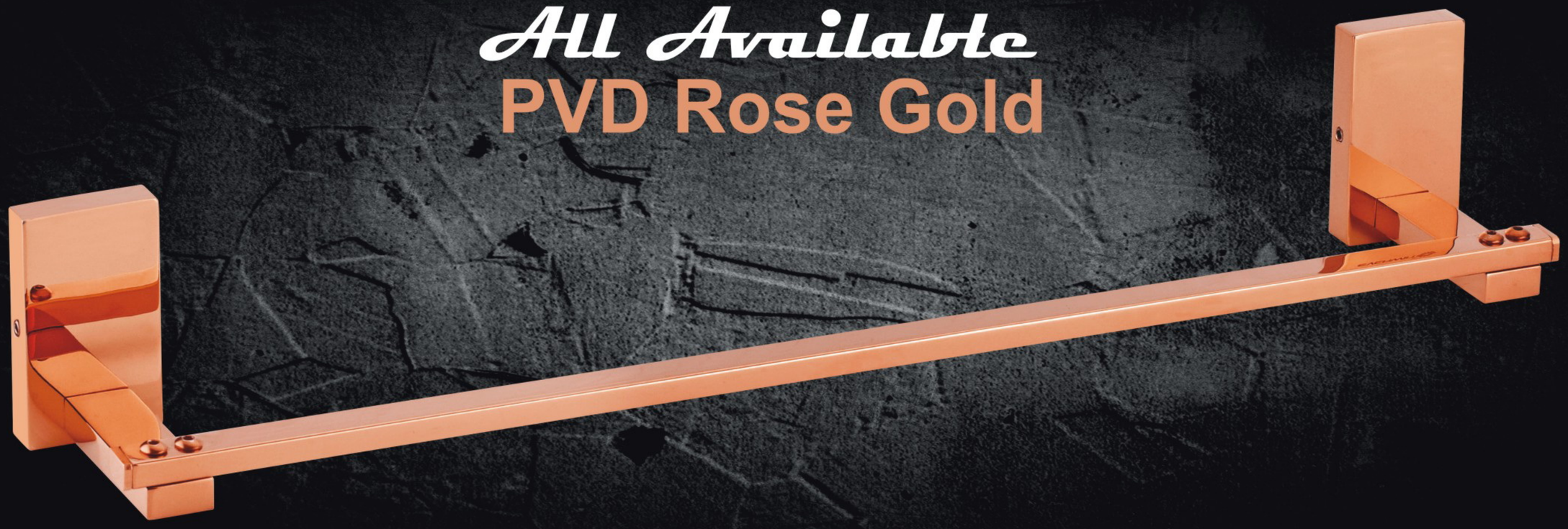

KREDONE®

QUALITY ASSURED WITH KREDONE

Len PVD Black

Collection



Code : 981

Soap Dish

MRP : 1565/-



Code : 982

Tumbler Holder

MRP : 1520/-



Code : 985

Rob Hook

MRP : 1175/-



Code : 984

Towel Road

MRP : 2905/



Code : 983

Napkin Ring

MRP : 1855/-



Code : 989

Liquid Dispenser

MRP : 1820/-

KREDONE®
QUALITY ASSURED WITH KREDONE

Len PVD Black
Collection



Code : 991
Tumbler With Soap Dish
MRP : 2920/-



Code :986
Towel Rack
MRP : 7820/-



Code : 990
Double Soap Dish
MRP : 2855/-



Code : 988
Paper Holder
MRP : 2725/-

All Available
PVD Black

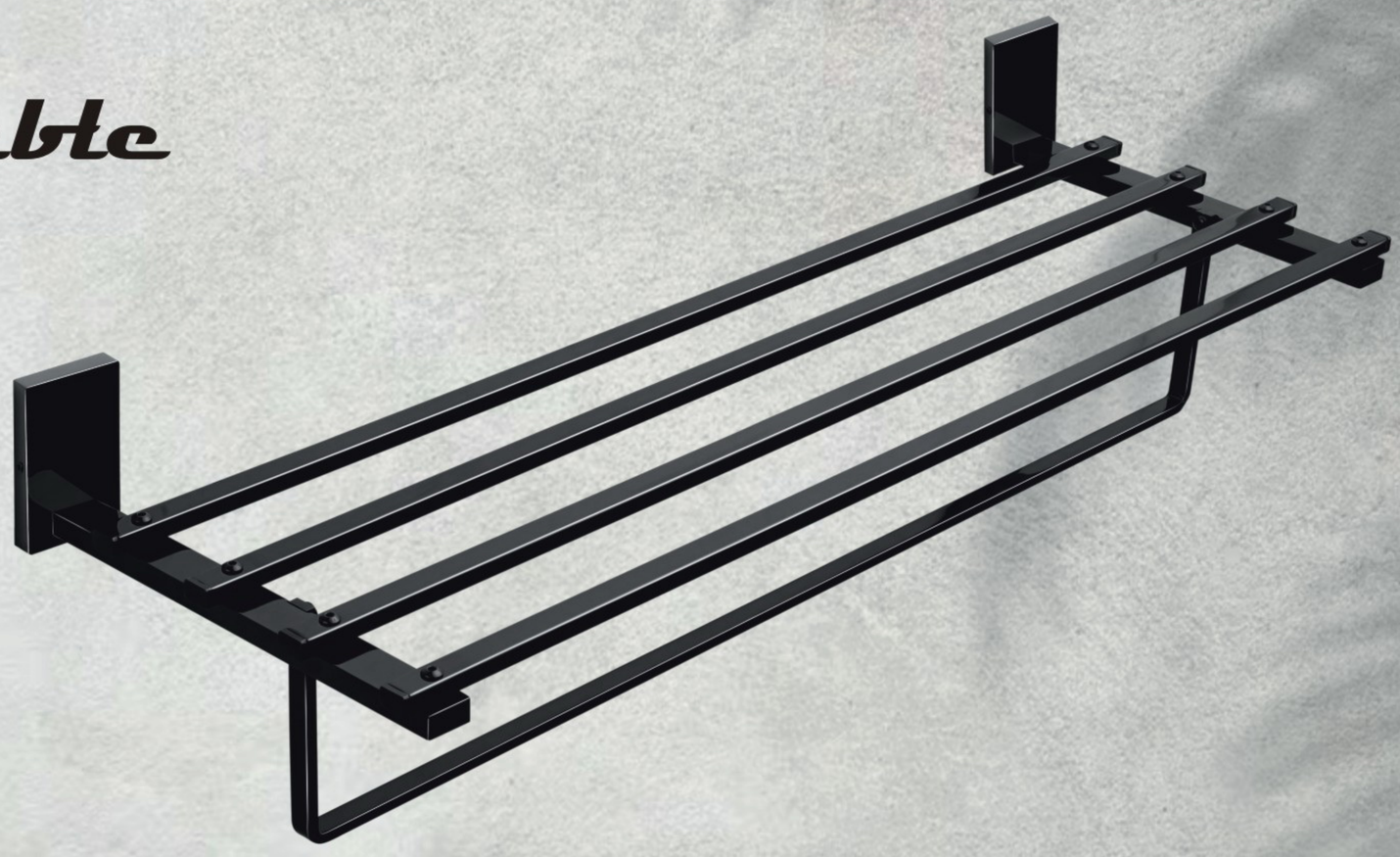

KREDONE®

QUALITY ASSURED WITH KREDONE

Len Matt Black

Collection



Code : 921

Soap Dish

MRP : 850/-



Code : 922

Tumbler Holder

MRP : 1110/-



Code : 925

Rob Hook

MRP : 765/-



Code :924

Towel Road

MRP : 1835/-



Code : 923

Napkin Ring

MRP : 1085/-



Code : 929

Liquid Dispenser

MRP : 1375/-

KREDONE®
QUALITY ASSURED WITH KREDONE

Len Matt Black
Collection



Code : 931
Tumbler with Soap Dish
MRP : 1660/-



Code :926
Towel Rack
MRP : 4740/-



Code : 930
Double Soap Dish
MRP : 1350/-



Code : 928
Paper Holder
MRP : 1415/-

All Available
Matt Black

KREDONE®
QUALITY ASSURED WITH KREDONE

Tajo
Collection



Code : 701
Soap Dish
MRP : 670/-



Code : 702
Tumbler Holder
MRP : 890/-



Code : 705
Rob Hook
MRP : 485/-

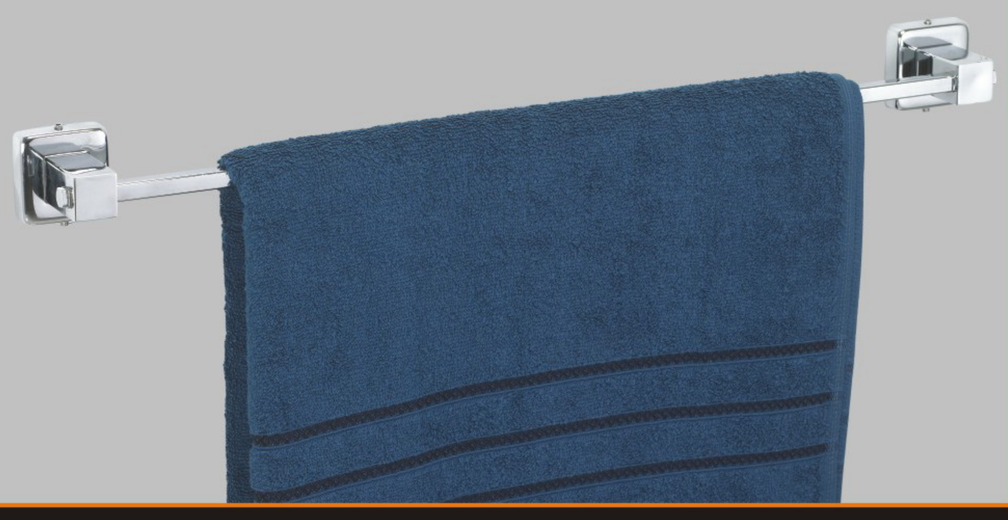

Code :704
Towel Road
MRP : 1090/-

Code : 703
Napkin Ring
MRP : 660/-



Code : 709
Liquid Dispenser
MRP : 1105/-

KREDONE®
QUALITY ASSURED WITH KREDONE

Tajo
Collection



Code : 707
Shampoo Dish
MRP : 665/-



Code : 712
3 in 1
MRP : 1795/-



Code : 711
Tumbler with Soap Dish
MRP : 1490/-



Code :706
Towel Rack
MRP : 3410/-



Code : 710
Double Soap Dish
MRP : 1250/-



Code : 708
Paper Holder
MRP : 1055/-



Code : 715
Tumbler with Liquid
MRP : 1870/-

KREDONE®
QUALITY ASSURED WITH KREDONE

Tajo Matt Black
Collection



Code : 721
Soap Dish
MRP : 670/-



Code : 722
Tumbler Holder
MRP : 890/-



Code : 725
Rob Hook
MRP : 485/-



Code :724
Towel Road
MRP : 1090/-



Code : 723
Napkin Ring
MRP : 660/-



Code : 729
Liquid Dispenser
MRP : 1105/-

KREDONE®
QUALITY ASSURED WITH KREDONE

Tajo Matt Black
Collection



Code : 727
Shampoo Dish
MRP : 665/-



Code : 732
3 in 1
MRP : 1795/-



Code : 731
Tumbler with Soap Dish
MRP : 1490/-

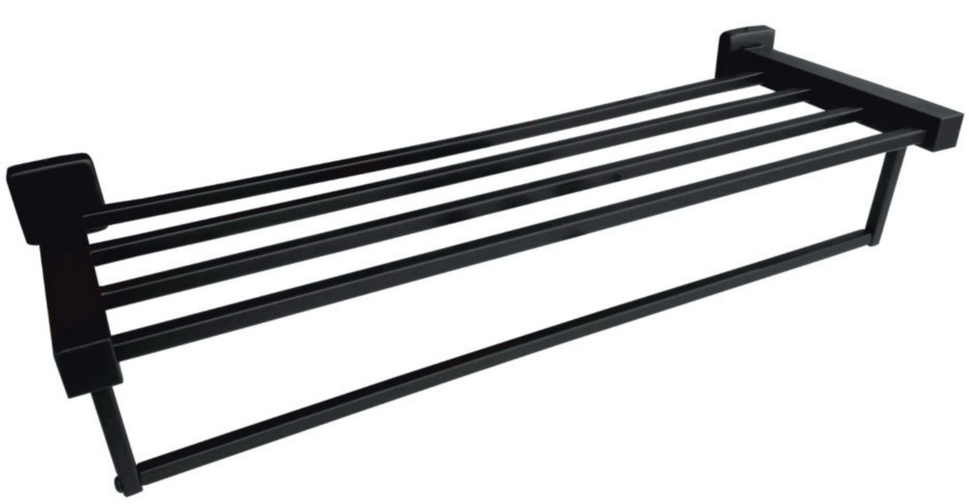

Code :726
Towel Rack
MRP : 3410/-



Code : 730
Double Soap Dish
MRP : 1250/-



Code : 728
Paper Holder
MRP : 1055/-

KREDONE®

QUALITY ASSURED WITH KREDONE

Ebro

Collection



Code : 601

Soap Dish

MRP : 650/-



Code : 602

Tumbler Holder

MRP : 870/-



Code : 605

Rob Hook

MRP : 515/-



Code :604

Towel Road

MRP : 1090/



Code : 603

Napkin Ring

MRP : 730/-



Code : 609

Liquid Dispenser

MRP : 1090/-

KREDONE®
QUALITY ASSURED WITH KREDONE

Ebro
Collection



Code : 607
Shampoo Dish
MRP : 640/-



Code : 612
3 in 1
MRP : 1750/-



Code : 611
Tumbler with Soap Dish
MRP : 1380/-



Code :606
Towel Rack
MRP : 3080/-



Code : 610
Double Soap Dish
MRP : 1130/-



Code : 608
Paper Holder
MRP : 1135/-



Code : 615
Tumbler with Liquid
MRP : 1750/-

KREDONE®

QUALITY ASSURED WITH KREDONE

Ebro Matt Black

Collection



Code : 621

Soap Dish

MRP : 650/-



Code : 622

Tumbler Holder

MRP : 870/-



Code : 625

Rob Hook

MRP : 515/-



Code :624

Towel Road

MRP : 1090/



Code : 623

Napkin Ring

MRP : 730/-



Code : 629

Liquid Dispenser

MRP : 1090/-

KREDONE®
QUALITY ASSURED WITH KREDONE

Ebro Matt Black
Collection



Code : 627
Shampoo Dish
MRP : 640/-



Code : 632
3 in 1
MRP : 1750/-



Code : 631
Tumbler with Soap Dish
MRP : 1380/-



Code :626
Towel Rack
MRP : 3075/-



Code : 630
Double Soap Dish
MRP : 1130/-



Code : 628
Paper Holder
MRP : 1135/-

KREDONE®

QUALITY ASSURED WITH KREDONE

Genil

Collection



Code : 801

Soap Dish

MRP : 610/-



Code : 802

Tumbler Holder

MRP : 825/-



Code : 805

Rob Hook

MRP : 475/-



Code : 804

Towel Road

MRP : 1110/-



Code : 803

Napkin Ring

MRP : 820/-



Code : 809

Liquid Dispenser

MRP : 1030/-

KREDONE®
QUALITY ASSURED WITH KREDONE

Genil
Collection



Code : 807
Shampoo Dish
MRP : 605/-



Code :806
Towel Rack
MRP : 2850/-



Code : 811
Tumbler with Soap Dish
MRP : 1550/-



Code : 810
Double Soap Dish
MRP : 1320/-



Code : 808
Paper Holder
MRP : 1085/-



Code : 815
Tumbler with liquid
MRP : 1925/-

KREDONE®
QUALITY ASSURED WITH KREDONE

Deuro
Collection



Code : 501
Soap Dish
MRP : 715/-



Code : 502
Tumbler Holder
MRP : 930/-



Code : 505
Rob Hook
MRP : 560/-



Code : 504
Towel Road
MRP : 1100/-



Code : 503
Napkin Ring
MRP : 740/-



Code : 509
Liquid Dispenser
MRP : 1160/-

KREDONE®

QUALITY ASSURED WITH KREDONE

Deuro

Collection



Code : 507

Shampoo Dish

MRP : 710/-

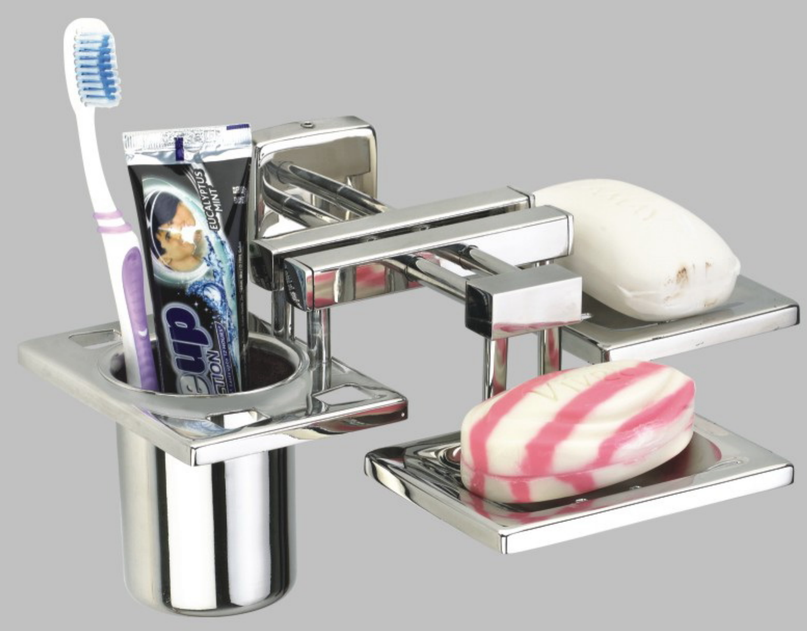

Code : 512

3 in 1

MRP : 2300/-



Code : 511

Tumbler with Soap Dish

MRP : 1590/-



Code :506

Towel Rack

MRP : 3165/-



Code : 510

Double Soap Dish

MRP : 1355/-



Code : 508

Paper Holder

MRP : 1130/-



Code : 515

Tumbler with Liquid

MRP : 1950/-

KREDONE®
QUALITY ASSURED WITH KREDONE

Jucar
Collection



Code : 401
Soap Dish
MRP : 635/-



Code : 402
Tumbler Holder
MRP : 860/-



Code : 405
Rob Hook
MRP : 530/-



Code : 404
Towel Road
MRP : 1015/

Code : 403
Napkin Ring
MRP : 640/-



Code : 409
Liquid Dispenser
MRP : 1080/-

KREDONE®
QUALITY ASSURED WITH KREDONE

Jucar
Collection



Code : 407
Shampoo Dish
MRP : 640/-



Code : 412
3 in 1
MRP : 1995/-



Code : 411
Tumbler with Soap Dish
MRP : 1405/-



Code :406
Towel Rack
MRP : 3060/-



Code : 410
Double Soap Dish
MRP : 1155/-



Code : 408
Paper Holder
MRP : 1080/-



Code : 415
Tumbler with Liquid
MRP : 1780/-

KREDONE®
QUALITY ASSURED WITH KREDONE

Glass Self Corner

Collection

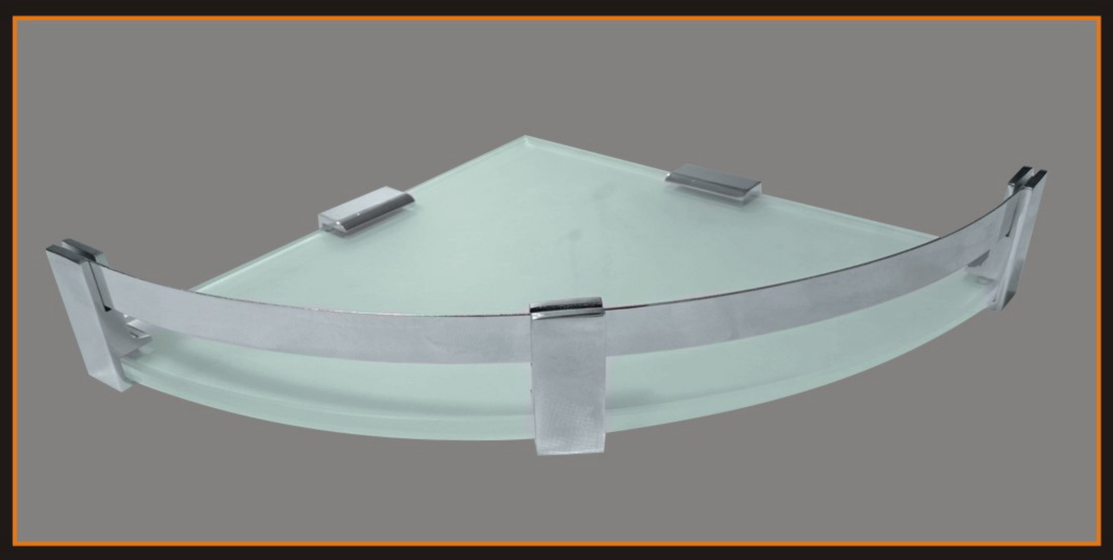

Glass Corner S.S

Code	Size	MRP
GC-101	9x9	1340/-
GC-102	12x12	1640/-

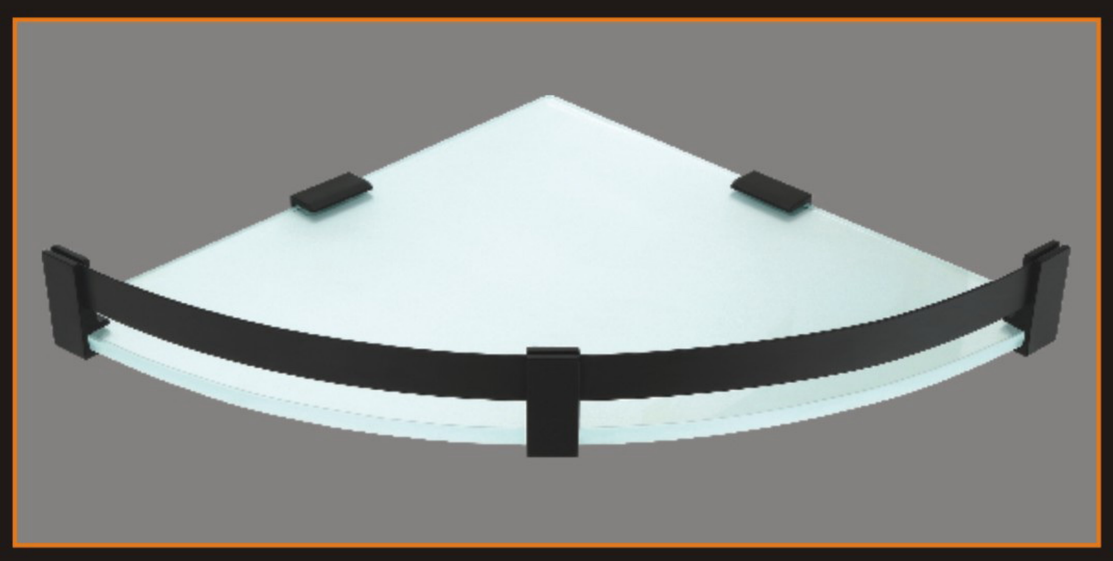

Glass Corner Matt Black

Code	Size	MRP
GC-106	9x9	1340/-
GC-107	12x12	1640/

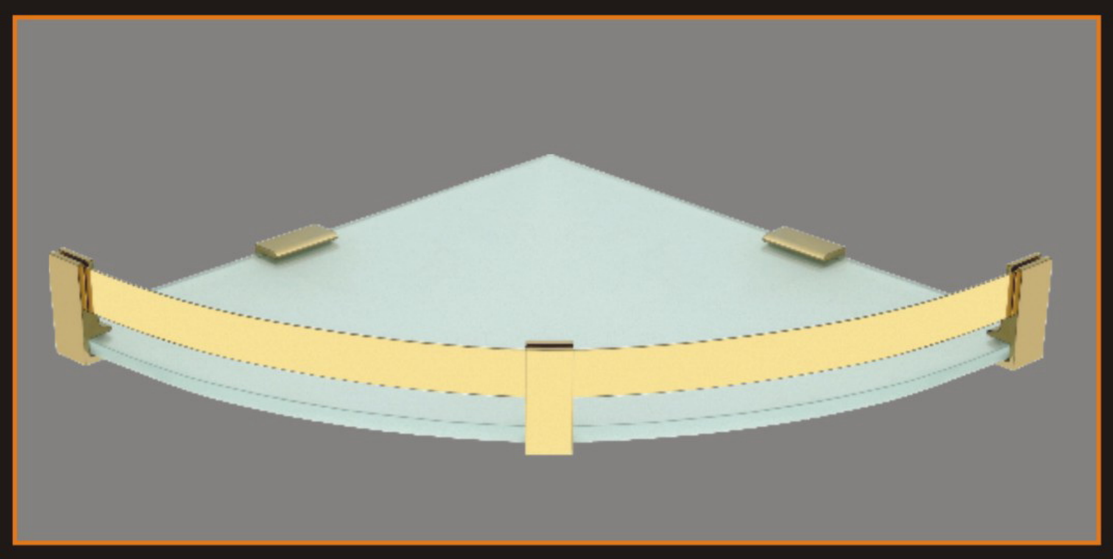

Glass Corner Gold PVD

Code	Size	MRP
GC-111	9x9	1720/-
GC-112	12x12	2100/-

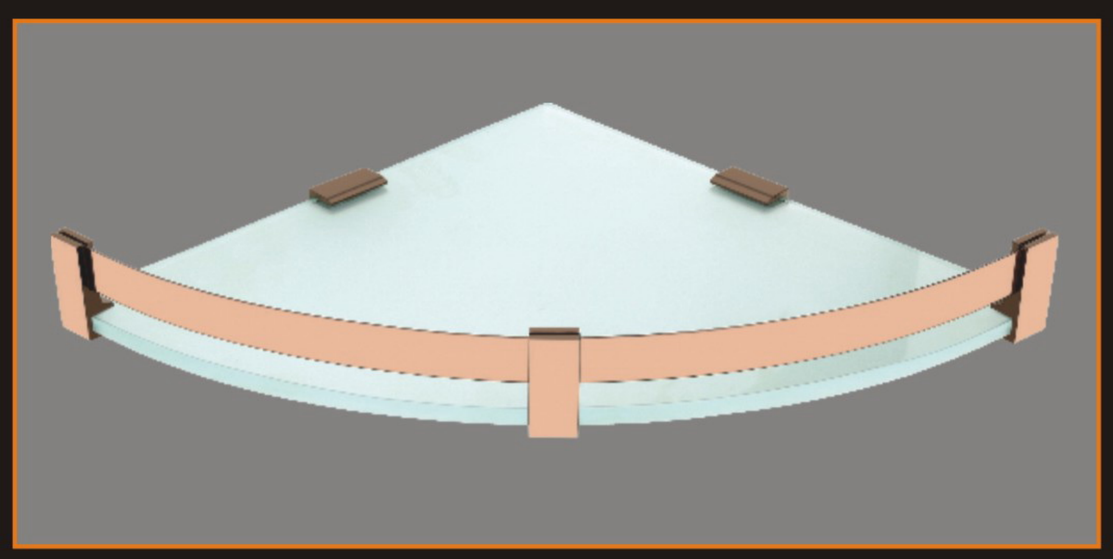

Glass Corner Rose Gold PVD

Code	Size	MRP
GC-116	9x9	1720/-
GC-117	12x12	2100/-

KREDONE®
QUALITY ASSURED WITH KREDONE

Glass Self Corner
Collection

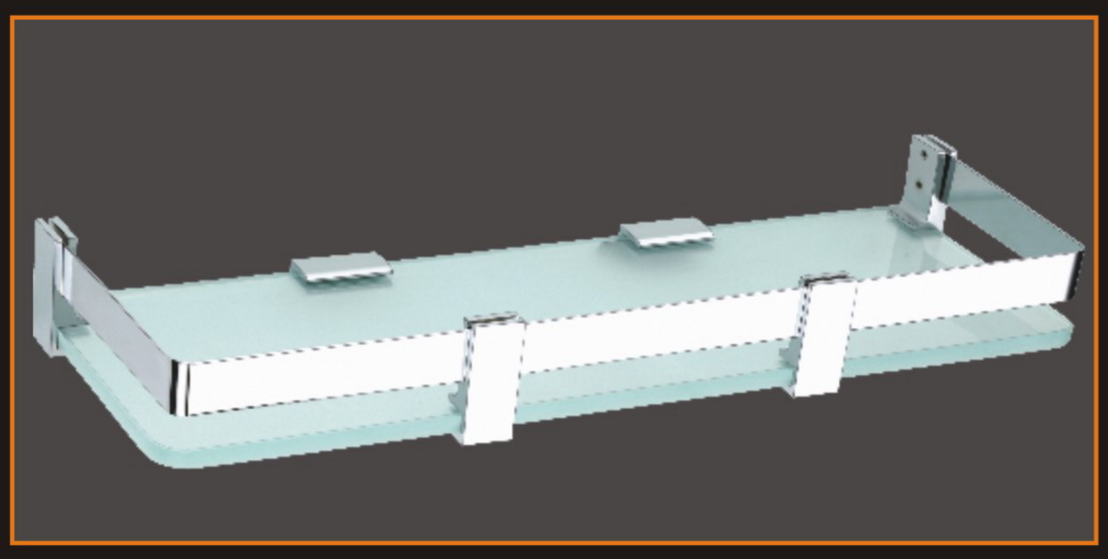

Glass Self S.S

Code	Size	MRP
GC-103	5x12	1390/-
GC-104	5x15	1490/-
GC-105	5x18	1580/-

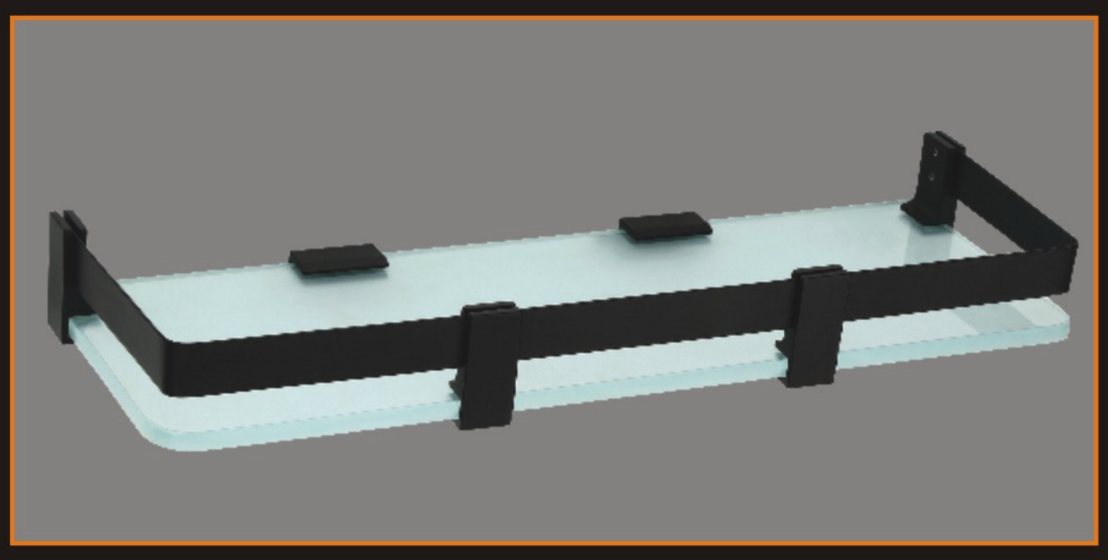

Glass Self Matt Black

Code	Size	MRP
GC-108	5x12	1390/-
GC-109	5x15	1490/-
GC-110	5x18	1580/-

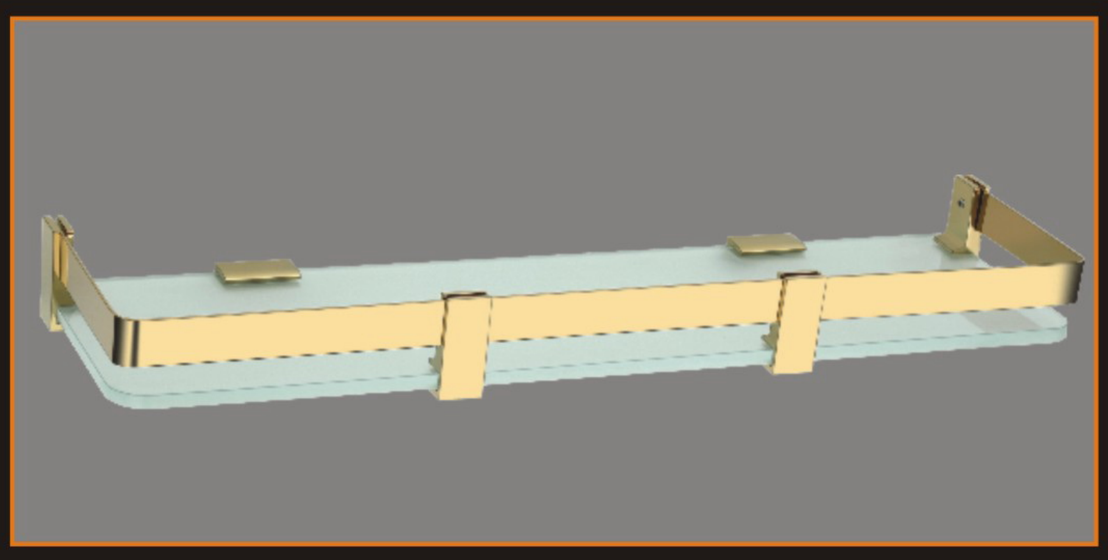

Glass Self Gold PVD

Code	Size	MRP
GC-113	5x12	1925/-
GC-114	5x15	2070/-
GC-115	5x18	2210/-

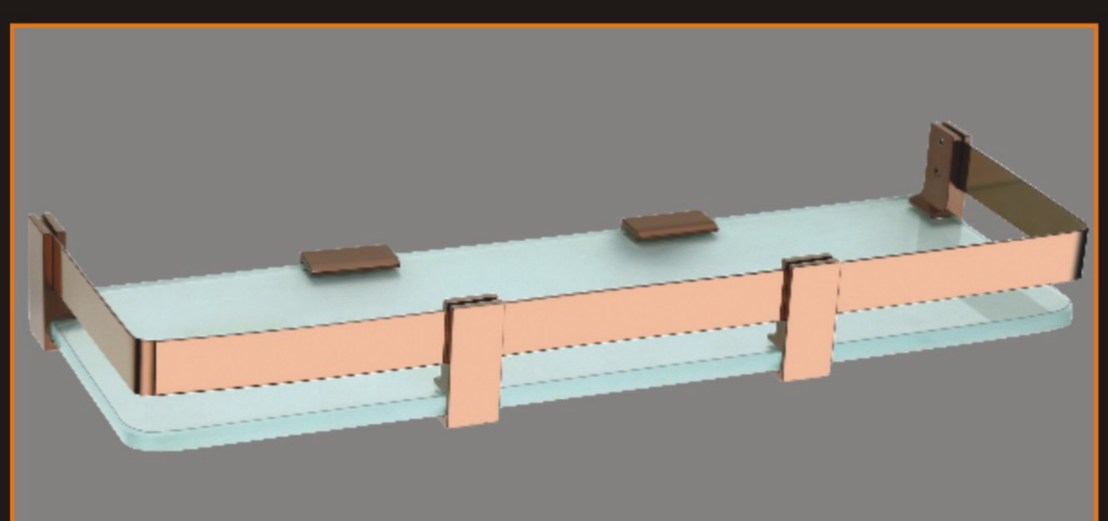

Glass Self Rose Gold PVD

Code	Size	MRP
GC-118	5x12	1925/-
GC-119	5x15	2070/-
GC-120	5x18	2210/-

KREDONE®
QUALITY ASSURED WITH KREDONE

Glass Self Corner
Collection

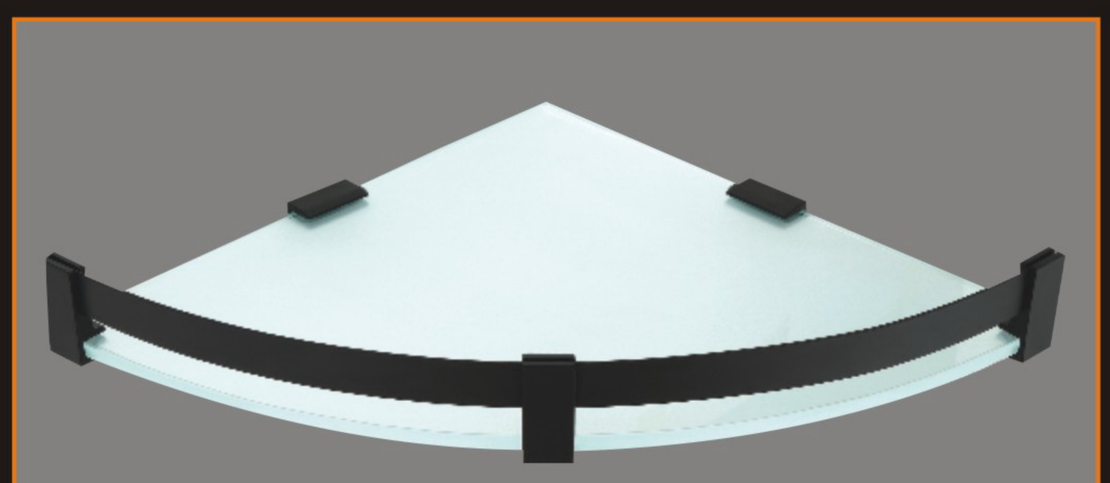

Glass Corner Black PVD

Code	Size	MRP
GC-121	9X9	2040/-
GC-122	12x12	2500/-

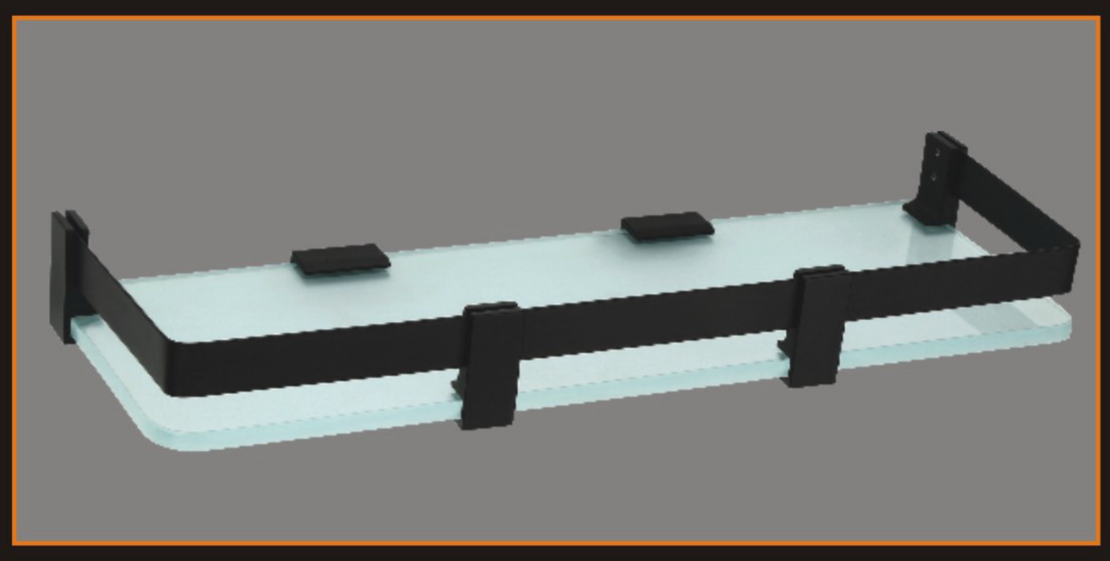

Glass Self Black PVD

Code	Size	MRP
GC-123	5x12	2400/-
GC-124	5x15	2590/-
GC-125	5x18	2775/-

Corner Like's
CURVE

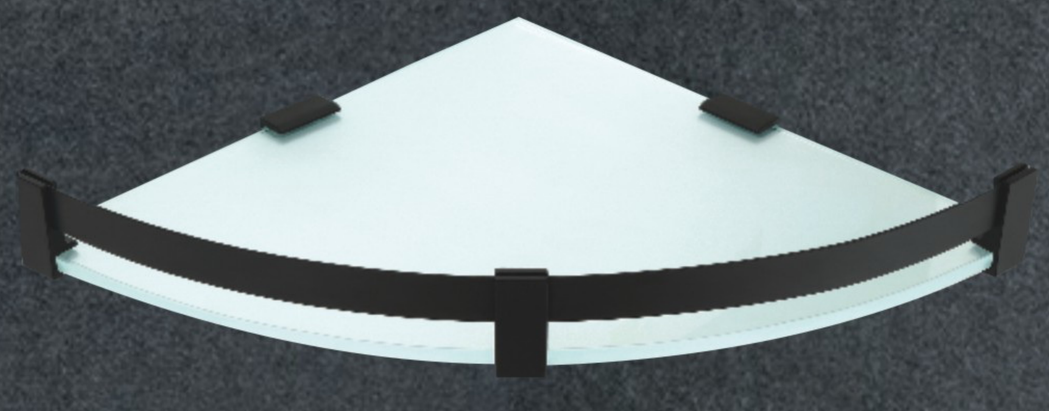

KREDONE®

QUALITY ASSURED WITH KREDONE

Self Corner

Collection



Code : AC-613

4 in 1

MRP : 5175/-



Code : AC-713

4 in 1

MRP : 5340/-



Code : AC-714

Folding Rack

MRP : 4165/-



Code : AC-151

Folding Rack

MRP : 3785/-

KREDONE®
QUALITY ASSURED WITH KREDONE

S.S Shelf
Collection

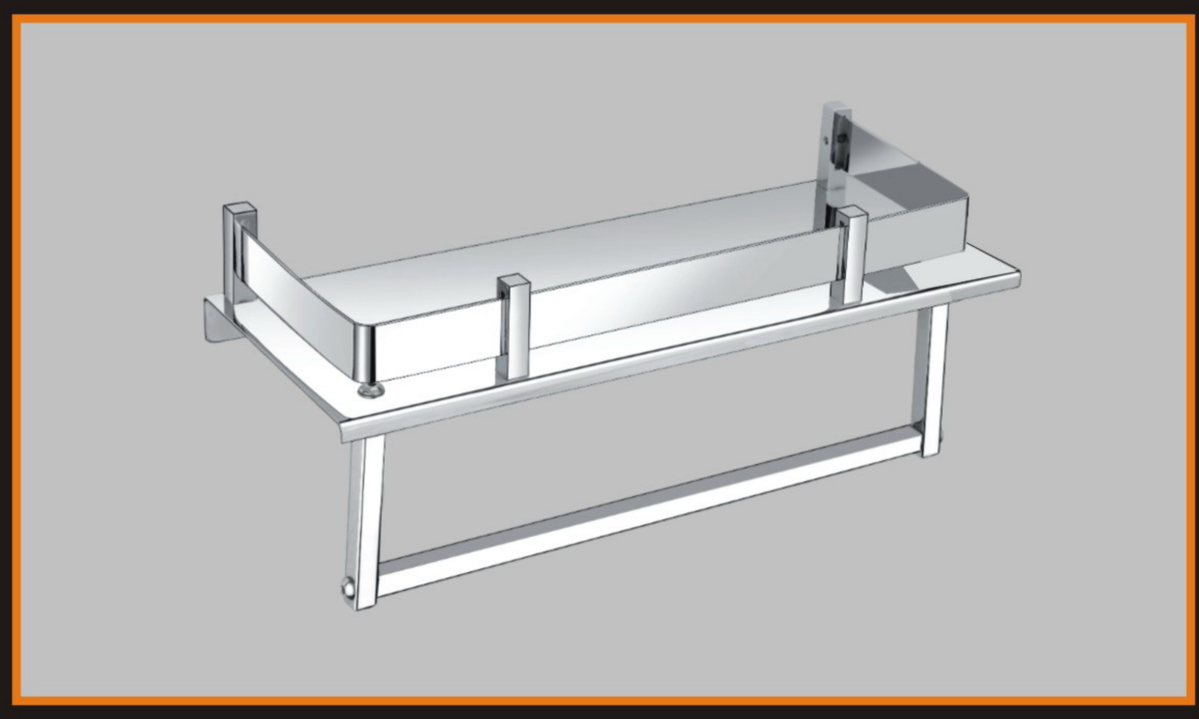

Square S.S Shelf

Code	Size	MRP
SS-131	5"X12"	1345/-
SS-132	5"X15"	1505/-
SS-133	5"X18"	1650/-

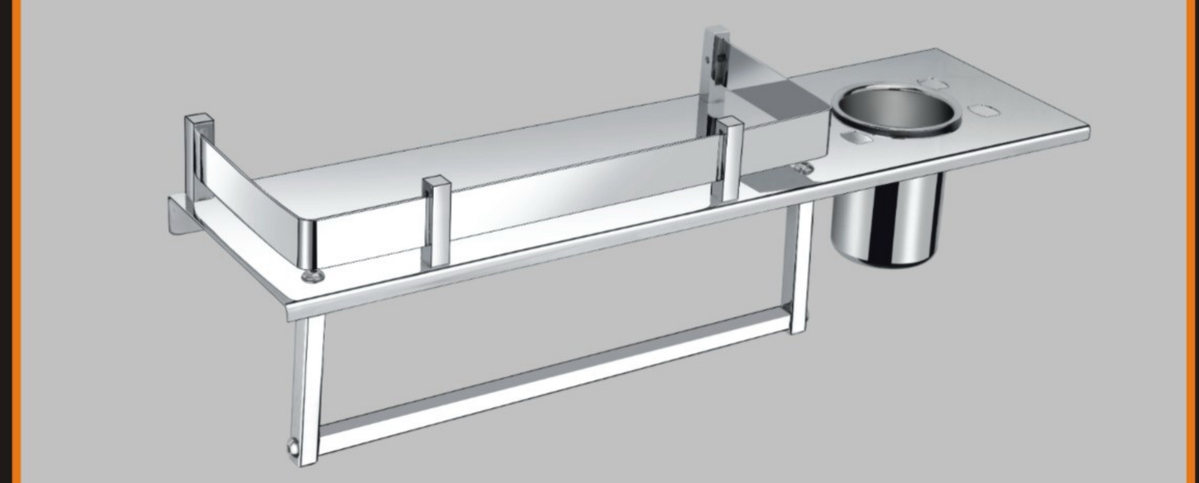

Square S.S Shelf 3 in 1 (Tumbler + Shelf + Rod)

Code	Size	MRP
SS-134	5"X18"	2160/-

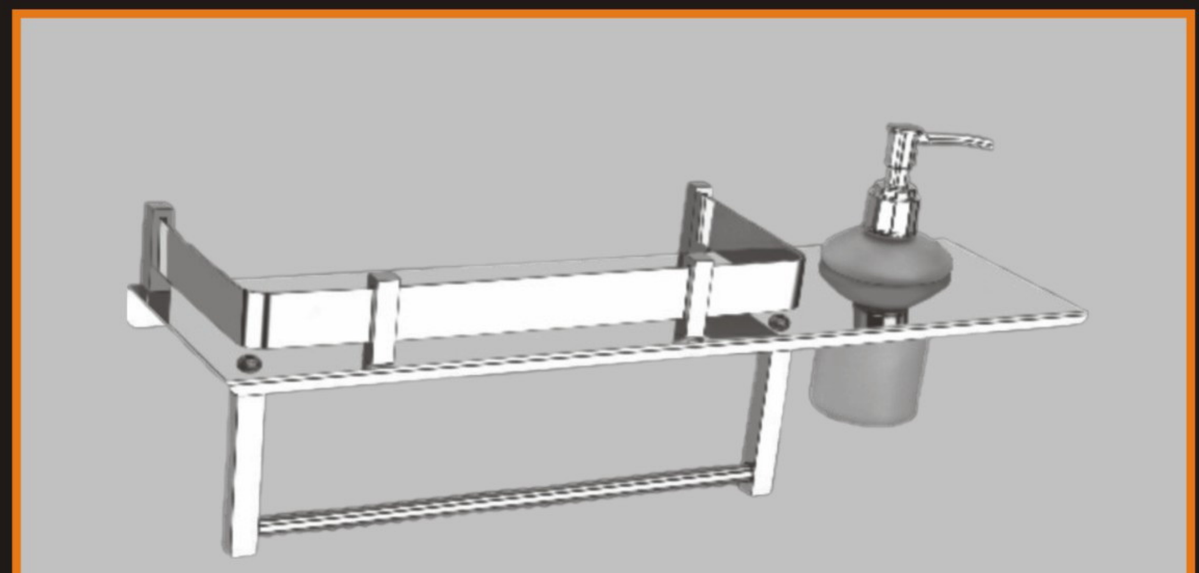

Square S.S Shelf 3 in 1 (Liquid + Shelf + Rod)

Code	Size	MRP
SS-135	5"X18"	2320/-

KREDONE®

QUALITY ASSURED WITH KREDONE

NOTE :

- We provide a warranty for S.S.304 Materials (Subject to our Standard Terms and Conditions). Please note that we are not responsible for any rust caused by chemicals or any similar means.
- Subject to jurisdiction in Ahmedabad.
- E.& O.E.

CUSTOMER INFORMATION AND TERMS :

- Ensure All Screws are securely fitted for optimal performance and longevity.
- For fitting adjustment, use a plastic hammer instead of iron for gentle and precise care, avoiding scratches or damage to accessories.
- To maintain the shine of your accessory or accessoriess for a long time, start by wetting it with plain water, then wipe it clean with a soft clothe.
- Avoid using acidic or any other harsh materials when cleaning your accessories.



To...Be. Continew

Coming Soon.....

KREDONE®

QUALITY ASSURED WITH KREDONE

Instagram

Youtube

IMPORTERS & MARKETED BY

KREDONE INTERIORS PVT. LTD.

E-mail: info@kredone.com

Website: www.kredone.com